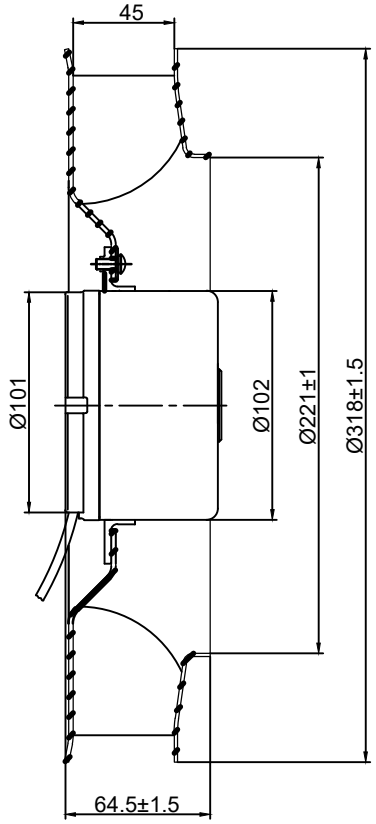
45
Ø101
Ø102
Ø221±1
Ø318±1.5
64.5±1.5

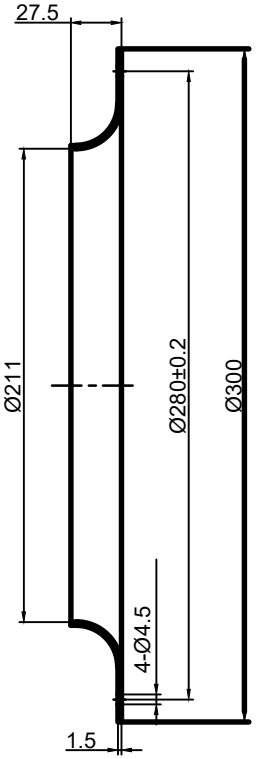
27.5
Ø211
Ø280±0.2
Ø300
4-Ø4.5
1.5

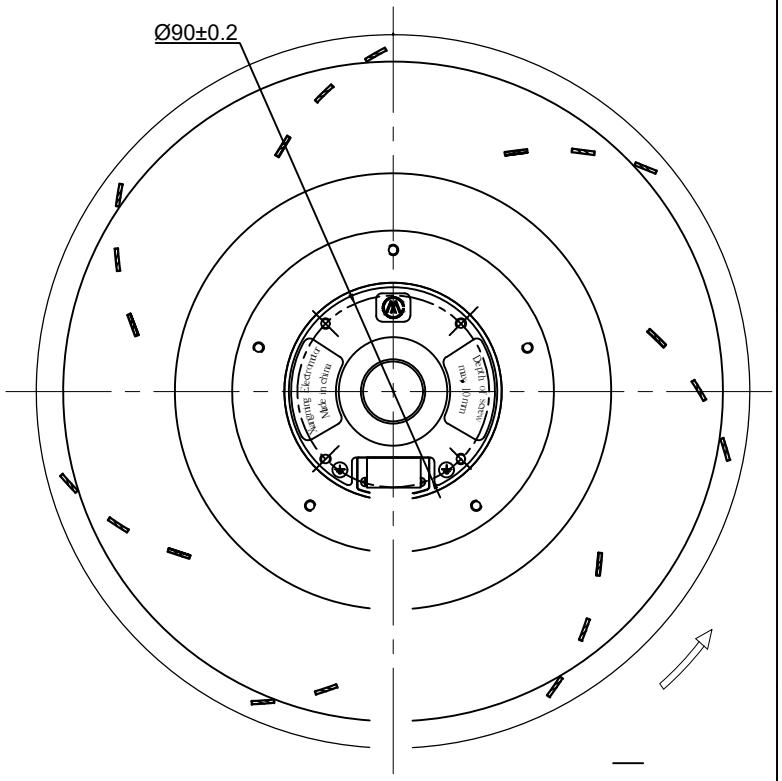
Ø90±0.2
Guangdong Electronics
Made in China
Guangdong Electronics
Made in China

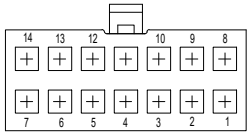
14
13
12
10
9
8
7
6
5
4
3
2
1

Ø